Abest Electric | Product User Manual |

AS-XSJ Intelligent Star-Delta Controller

8.8.8.8
Power
Manual
Running
Star start
Fire
Basic
Fire damper
Auto
Fault
Mute
Fire start
Force start
Set
Save
Manual
Auto
Start
Stop
Abest
Star-delta controller | XSJ

ABEST ELECTRIC CO.,LTD.

All copyrights reserved. No reproduction

All information about the AS-XSJ Intelligent Star-Delta Controller, including software, appearance, circuit board design and the user manual. Which is owned by Abest Electric Co., Ltd. (hereinafter referred to as "the Company"). Without the Company any permission, any company and individual shall not be imitated,copy,extracted and duplicated. Otherwise the Company shall have the right to pursue the responsibility of the parties.

The contents of the user manual mentioned is for reference only. The software may be changed or upgraded without prior notice. For more details, please visit the Company's website or contact the Company directly.

If there is any error on the user manual,the Company has no obligation to take any responsibility for it.

Version number: V1.02

Issued in June 2025
Abest Electric Co., Ltd

Product description

XSJ series star-delta step-down intelligent controller is a controller applied to high power motor step-down start, usually applied to motor, fan and water pump star-delta logic operation principle.

This product is suitable for motors with power below 30KW (AC contactor 80A).

Note: When AC contactor > 80A need to add general relay.

Shape & Size drawing

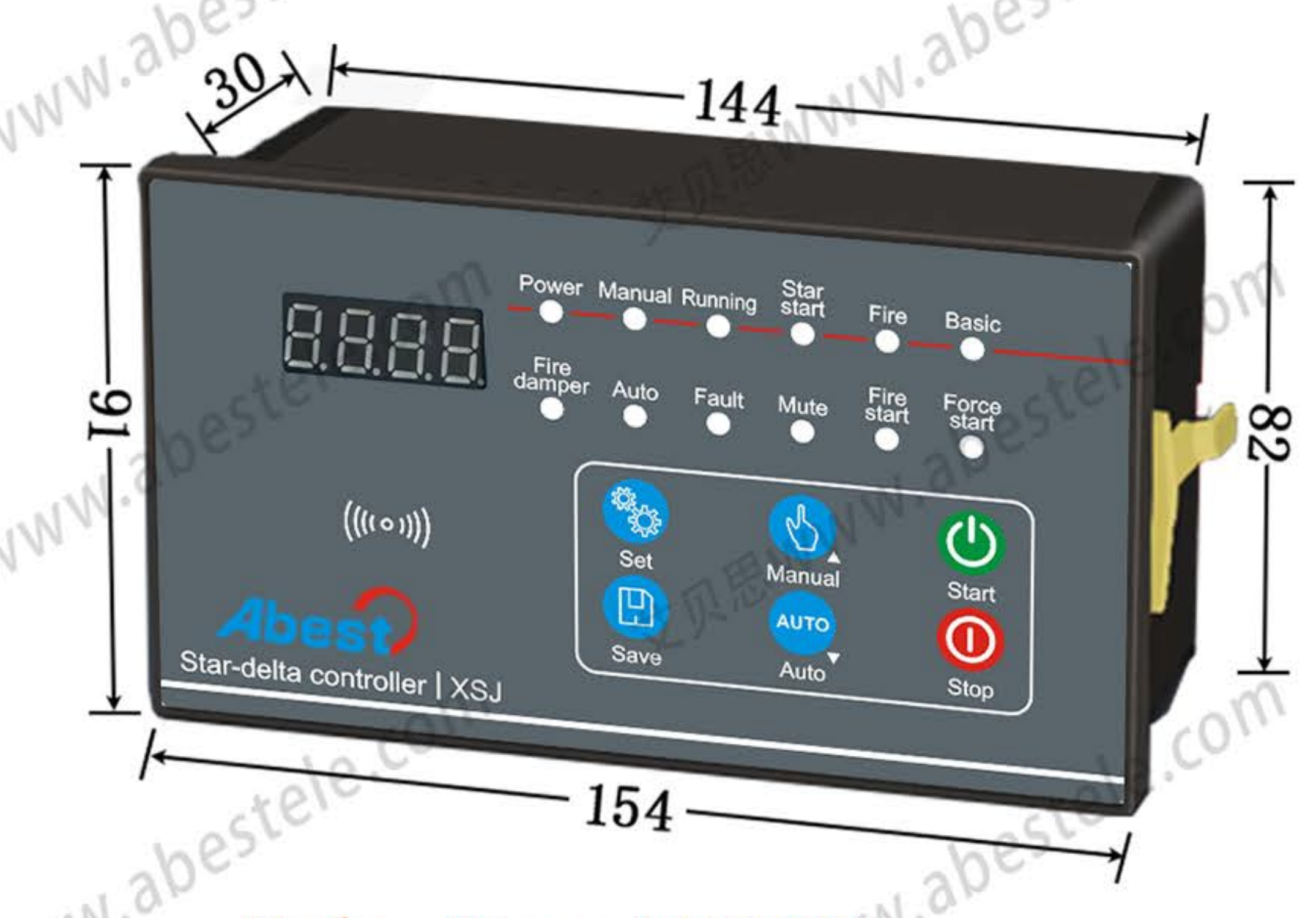
30
144
91
82
154
8.8.8.8
Star-delta controller | XSJ

Hole Size:145×83

Terminal description

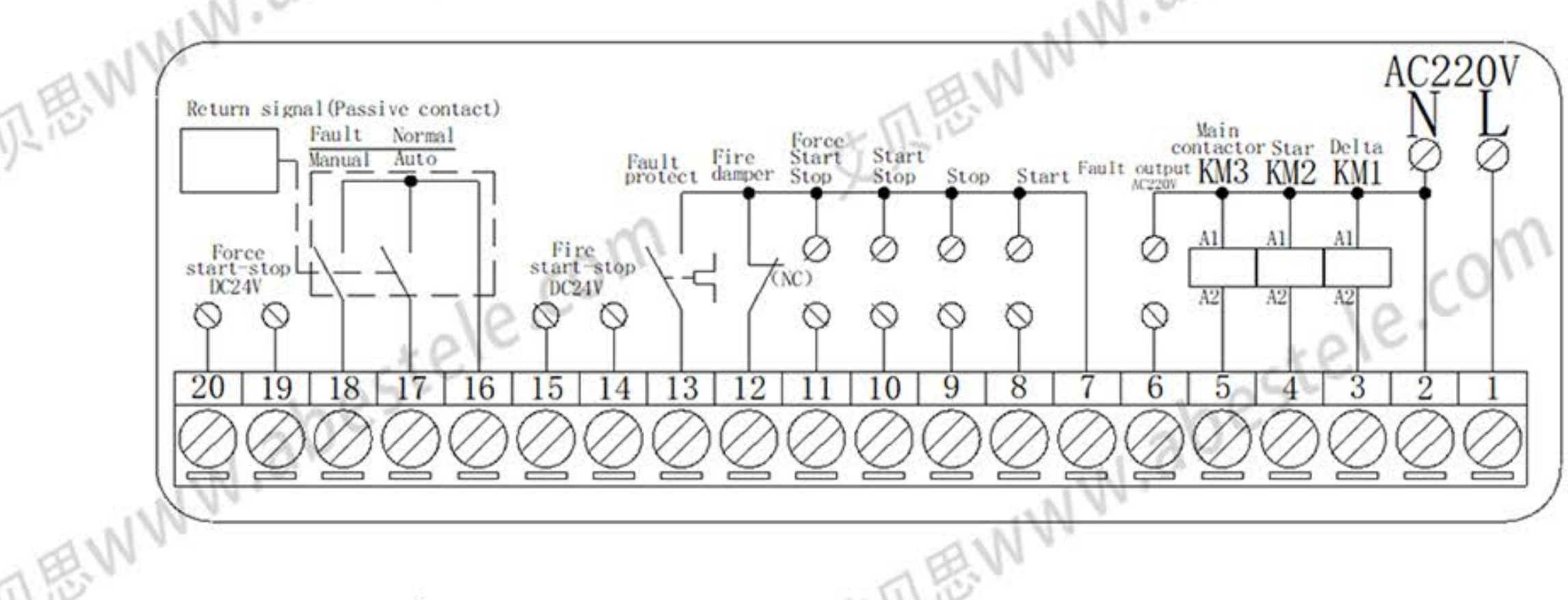
Return signal(Passive contact)
Fault Normal
Manual Auto
Force start-stop DC24V
Fire start-stop DC24V
Fault protect
Fire damper
Force start-stop
Start stop
Stop
Start
Fault output AC220V
Main contactor KM3
Star KM2
Delta KM1
AC220V
N
L
20 19 18 17 16 15 14 13 12 11 10 9 8 7 6 5 4 3 2 1

Terminal No.	Description
1	Working power supply AC220V Live line(L)
2	Working power supply AC220V Neutral line(N)
3	Delta contactor coil control terminal
4	Star contactor coil control terminal
5	Main contactor coil control terminal
6	Fault output AC220V
7	Common signal control terminal
8	Automatic signal control terminal
9	Automatic signal control terminal
10	Automatic signal control terminal
11	Automatic signal control terminal
12	Fire damper(no fire damper short-connected)
13	Fault protect(factory default NO)
14	Fire start-stop(DC24V)
15	
16	Common signal control terminal
17	Passive contact/Auto(ON) / Normal(ON)
18	Passive contact/Manual(ON) / Fault(ON)
19	Force start-stop(DC24V)
20	

Parameter setting

Code	Factory default	Description
P01	1	1=Basic (fault shutdown) 2=Fire (fault only alarm without stopping output)
P02	1	Fault protection type select 1=NO 2=NC
P05	1	16/17/18 terminal function select 1= Auto/manual feedback 2= Normal/fault feedback
P06	7	Star start time range 1～30S
P07	0.5	Transfer delay time range 0.1～5S
P08	9600	Communication baud rate 2400、4800、9600
P09	n81	Communication data format:n81、e81、o81
P10	1	Communication address range 1～247
P11	1	1=fault alarm 2=fault mute
P25	000	Controller unlock password range 000～999.When set to 000, there is no password

Output control terminal description

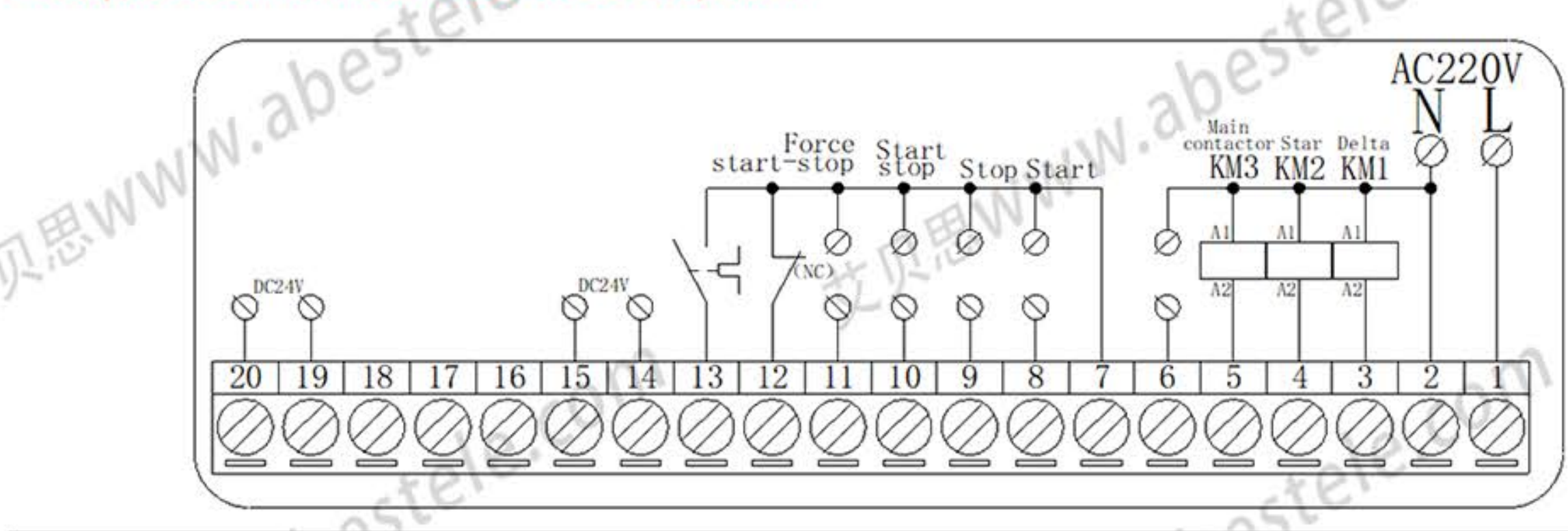
AC220V
N
L
Force start-stop
Start stop
Stop
Start
Main contactor KM3
Star KM2
Delta KM1
A1
A2
DC24V
DC24V
(NC)
20 19 18 17 16 15 14 13 12 11 10 9 8 7 6 5 4 3 2 1

Auto	7:Common signal control terminal 8:Electric contact pressure gauge (Electric contact temperature meter) lower limit start pump 9:Electric contact pressure gauge (Electric contact temperature meter) upper limit stop pump 10:ON(start)、OFF(stop) 14,15: DC24V start-stop Note:Click 8# to start,click 9# to stop
Auto/Manual	11:ON(start)、OFF(stop) 19,20: DC24V start-stop

Control Key

Set	Setting parameter code and parameter values
Save	Save the modified parameter values and exit the setting
Manual	Manual mode selection, parameter code increment, parameter value increment
AUTO Auto	Auto mode selection, parameter code decrement, parameter value decrement
start	Pump start key in manual mode、Set password or unlock shift mouse
stop	Pump stop key in manual mode、Set password or unlock shift mouse

Indicator

●Power	Indicator blink on:the controller is powered on
●Fire damper	Indicator ON:Fire damper(NC) switch to (NO)
●Manual	Indicator ON: in manual mode
●Auto	Indicator ON: in Auto mode
●Running	Indicator ON:running
●Fault	Indicator ON:faulty
●Star start	Indicator blink on:in star-delta transition, light off when complete
●Mute	Indicator on:code P11=2(fault alarm without sound)
●Fire	Indicator on:code P01=2(fault only alarm without stopping output)
●Fire start	Indicator on:switch-on fire start-stop(DC24V)
●Basic	Indicator on:code P01=1(fault shutdown)
●Force start	Indicator on:switch-on force start-stop(DC24V)

Parameter code setting

Long press Set to enter the parameter code display,

click Manual or AUTO Auto to select the parameter code you want to modify (Long press for quick selection).
If no need to modify, click Save and exit the parameter code setting at any time

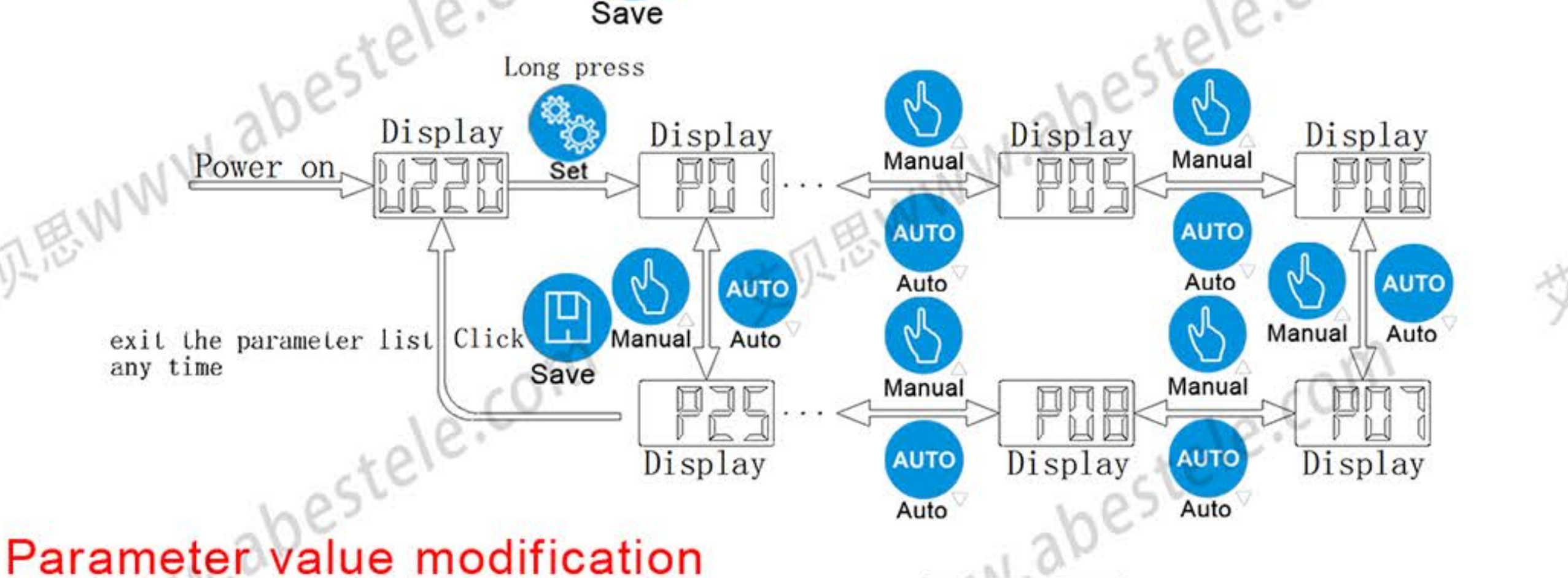
Power on
Display
U220
Long press
Set
Display
P01
P05
P06
P07
P08
P25
Manual
Auto
Click
Save
exit the parameter list any time

Parameter value modification

Take the modification of star start time(code P06)as an example:

Long press Set to enter the parameter code display,then click Set to enter the parameter value,

click Manual or AUTO Auto to select the parameter code you want to modify (Long press for quick selection).

Modified, click Save save & exit the parameter value setting at any time

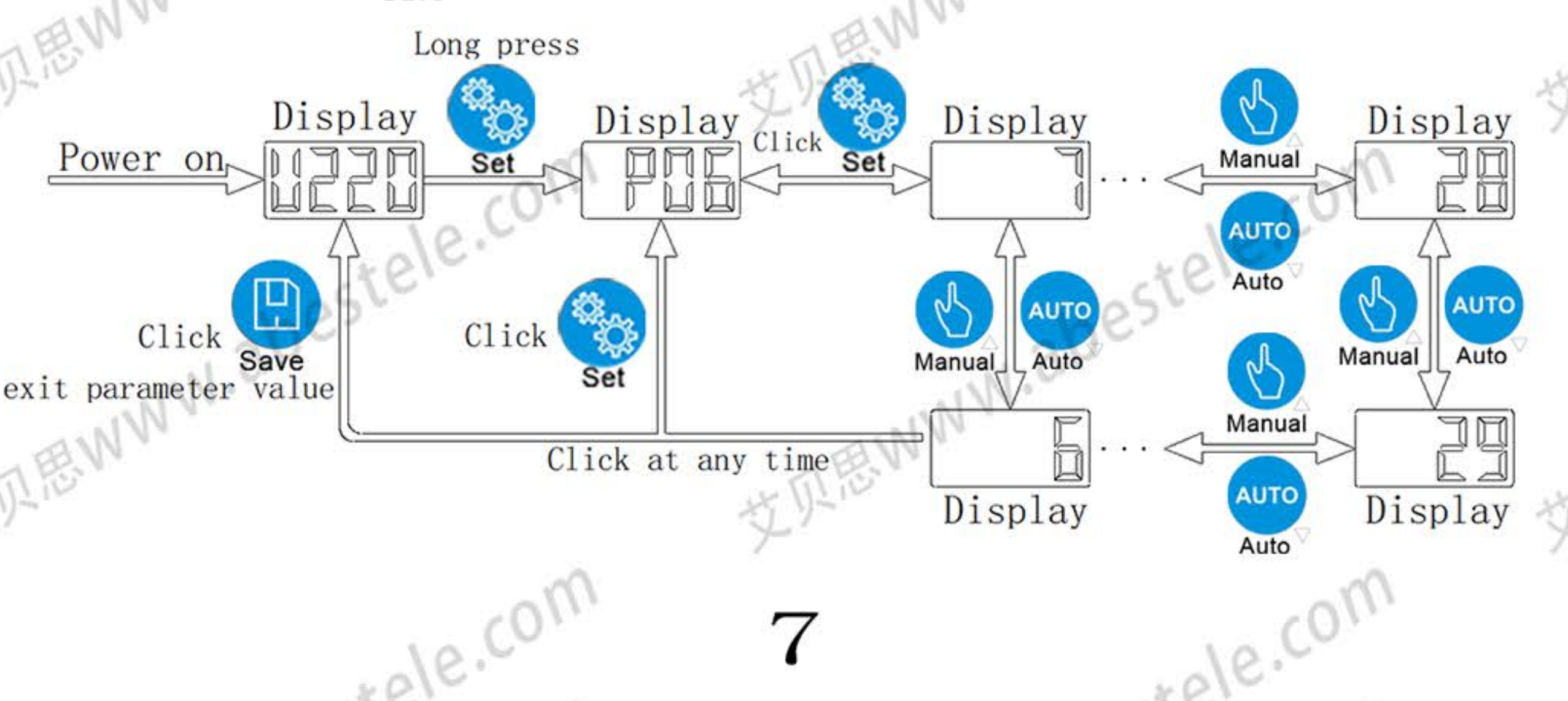
Power on
Display
U220
Long press
Set
Display
P06
Click
Set
Display
7
28
29
6
Manual
Auto
Click
Save
exit parameter value
Click
Set
Click at any time

16/17/18 terminal function select

P05=1 Auto (16#、17# ON), Manual (16#、18# ON)
P05=2 Normal (16#、17# ON), Fault (16#、18# ON)

Password setting

Set password "123" as an example

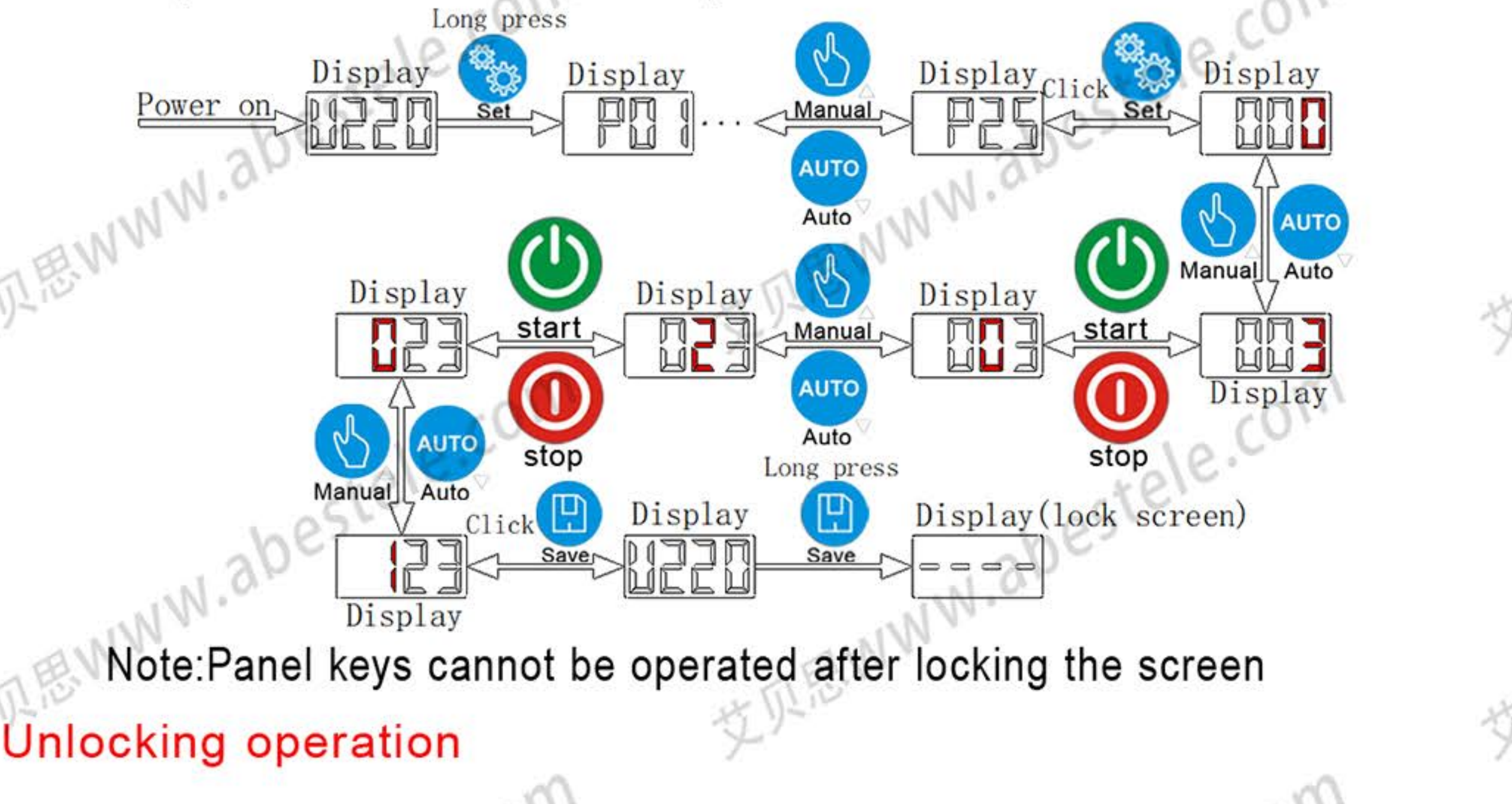
Long press
Power on
Display
U220
Set
Display
P01
Manual
Auto
Display
P25
Click
Set
Display
000
Display
023
start
stop
Display
003
Manual
Auto
Long press
Display
123
Click
Save
Display
U220
Display(lock screen)

Note:Panel keys cannot be operated after locking the screen

Unlocking operation

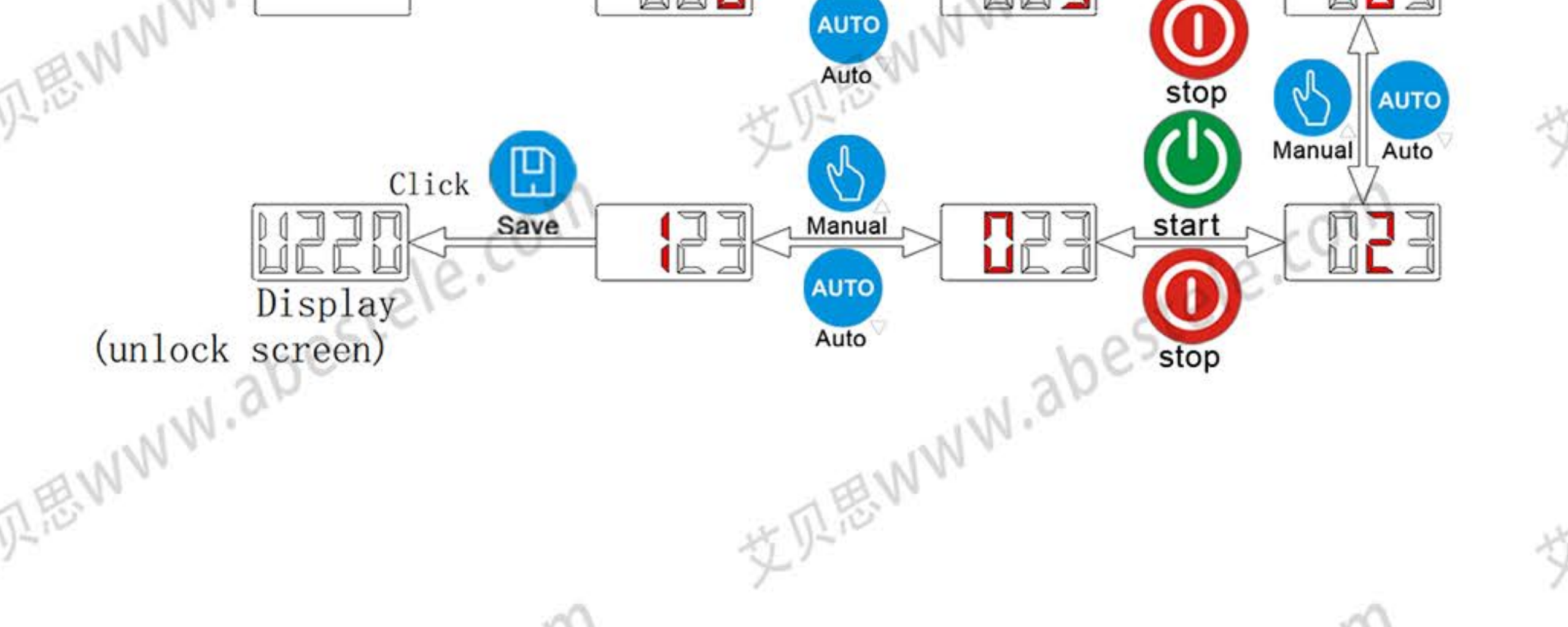
Display (lock screen)

Long press
Save
Display
000
Manual
Auto
Display
003
start
stop
003
023
023
123
Click
Save
U220
Display (unlock screen)